11 rue Pasteur – 78600 Maisons-Laffitte – T : 33 1 39 62 06 56 – F : 33 9 82 63 67 02
info@picker.fr – www.picker.fr

MANUFACTURER
OF
MULTI TUBULAR HEAT EXCHANGERS

GENERAL DOCUMENTATION

PRESENTATION OF COMPANY

PICKER S.A. **owes its notoriety with its position in her sphere of activity, with the quality of their products and the behavior of their engagements (delivery periods, availability of the spare parts…)**

Company:

- Limited company with capital of 1 789 200 euros created in 1947.
- Head office and production located at 11 rue Pasteur 78600 MAISONS-LAFFITTE.
- Factory on 2000 m² including 1200 covered m².

Activity:

Manufacture, marketing and after-sales of multi tubular heat exchangers liquid/liquid.

The part of subcontracting for ***PICKER S.A.*** is limited to foundry, machining and transport.

Means:

- **Sales department:** offers and commercial follow-up.
- **Engineering department:** engineering and design department, technical costs, documentation.
- **Scheduling service:** post production, purchases and internal maintenance.
- **Production service:** machining, welding, assembly, tests, traceability and control.
- **Forwarding service:** packing, forwarding and contractual documentation.
- **Administrative and financial service:** invoicing, cash and accountancy.
- **After-sales service:** spare parts and fixing.

PICKER S.A. has a specialized and qualified personnel with the data-processing techniques and communication and using powerful material resources, centered on quality.

Reference:

PICKER S.A. is known of long date near organizations of public market, of multinational companies and also of small and medium-sized companies.

PICKER S.A. has at least 6000 customers all over the world in more than 100 different countries.

Our products are usually used in the following applications:

Car industry	Plastic industry	Energy
Vehicles	Paper mills	Sugar refineries
Iron and steel industry	Cement factories	Thermals
Naval repair	Armament	Pumping
Shipbuilding	Railway	Petrochemical

Assets:

- **Adaptability:** the structure, the organization and the management of production of ***PICKER S.A.*** authorize the manufacture of products as well to the unit as in small or average series. This flexibility, combined with an important stock of spare parts make it possible to face urgent requests as soon as possible.
- **Reactivity:** Customers of ***PICKER S.A.*** appreciate daily the rigor, the availability and the complete staff reactivity.
- **Experience:** more than 70 years.
- **Guarantee:** ***PICKER S.A.*** guarantees their products for 2 years from our factory (cf. § “sale general conditions”).

Internet:

Find us on our website: **www.picker.fr** and contact us on: **info@picker.fr**.

PRODUCT

General information:

The *heat exchangers* ***PICKER*** are of the type with **"SHELL and TUBES"** and are manufactured according to **"MANUFACTURER SWITCHBOARD"** (no manufactures according to customer drawing and/or according to construction codes.

The *heat exchangers* ***PICKER*** are not subjected to the essential requirements of safety of the European Directive "EQUIPMENT UNDER PRESSURE 97/23/CE3. They are all manufactured according to the "code of practice" (Article 3 §3 of this EU Directive).

The *heat exchangers* ***PICKER*** are appropriate for all applications of cooling or reheating of **a liquid by another liquid only**, and also compatible with the characteristics of construction of our products.

The standardization of a maximum of the components of the *heat exchangers* ***PICKER*** generates a wide range able to satisfy the most varied thermal programs.

The *heat exchangers* ***PICKER*** are entirely and easily dismountable (shell, bundle, covers) in order to facilitate the maintenance of the appliances or to replace only the necessary worn parts.

The *heat exchangers* ***PICKER*** have tube bundles with free dilatation (with one or two tubular plates « slipping ») in order to reduce certain mechanical constraints.

The *heat exchangers* ***PICKER*** are with simple passage of the fluid shell side (around the tubes) and can be, according to the families of exchangers, with simple, double or quadruple passage of the fluid tubes side (in the tubes).

The connection of the bundle tubes on the tubular ones of the *heat exchangers* ***PICKER*** is carried out by tinning tin-lead (Sn–Ag).

The bundle tubes of the *heat exchangers* ***PICKER*** are rectilinear (no tubes in « U ») with an external diameter of 6 or 8 mm and one thickness fixed at 0.5 mm whatever the material.

Limits of construction:

Service pressures:

In the *heat exchangers* ***PICKER***, the acceptable maximum pressures are, for the most of families of exchangers of:

Acceptable maximum pressure (bar)	SHELL side	TUBES sides
Service	**16**	**10**
Test	**24**	**15**

The hydraulic tests are carried out systematically and exclusively with oil.

Service temperatures:

In the *heat exchangers* ***PICKER*** equipped with nitrile O-rings, the maximum temperature of the heating fluid (shell side) can reach **100 °C**. It is the basic standard.

In the *heat exchangers* ***PICKER*** equipped with fluorocarbon O-rings (« VITON ») the maximum temperature of the heating fluid (shell side) can reach **200 °C**

Construction:

Construction materials:

The *heat exchangers* ***PICKER*** are manufactured with the following building materials, according to families of exchanger. This list is not exhaustive, referring in the overall drawings of the products to know the possible material combinations for a given family of exchangers. The choice of such or such material is mainly based by the nature, the temperature and the conditions of circulation of the fluids in the exchangers.

Shell	Alloys of aluminium, copper and bronze
Bundle tube	Copper, copper nickel 90/10, stainless steel 316L
Tubular plate	Bronze
Baffle	Brass
Tie	Copper, stainless steel
Cover	Iron cast, bronze
Anode	Zinc
Counter flange	Carbon steel, bronze
Screw	Carbon steel, brass
Central rod	Cooper aluminium
O ring	Nitrile, fluorocarbon, ethylene-propylene
Flat gasket	Synthetic fiber without asbestos
Profiled gasket	Ethylene-propylene

External protection:

The *heat exchangers* ***PICKER*** are protected outside from corrosion with a reactive primary painting - colour grey. This painting, only intended to ensure the adherence of the later layers (intermediate and/or completion), is compatible with the majority of the paintings used in industry.

Leak ring:

Most of the *heat exchangers* ***PICKER*** are equipped with double O-ring of sealing between tube bundle and element, side plate tubular « slipping » (cf. drawing hereafter).

The addition of an intercalated ring creates a free air of the fluid in case of deterioration of one of the gaskets and avoids any risk of an accidental mixing of the two involved fluids.

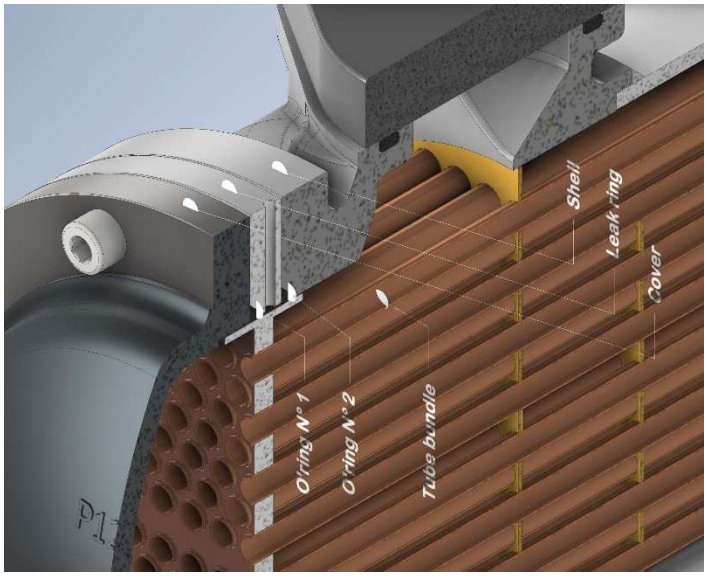

Sealing « slipping » tubular plate side

Fixation heat exchangers:

The *heat exchangers* ***PICKER*** are fixing on the installation by two mounting feet with tapped holes, integrated origin in the foundry of the shell.

The *heat exchangers* ***PICKER*** can be installed indifferently vertically or horizontally, and in this last case, on the ground, on the ceiling or on the wall.

Fluids connections:

On the *heat exchangers* ***PICKER***, fluids connections are different further the exchangers families:

- By tapped holes directly on the shell or cover (till 1'' ¼).
- By our standard counter-flanges, delivered blank with gaskets, screws and bolts (for welded, brazed or screwed connections).

With additional charge, the machining of the counter flange can be done by own self. This option has to be noted on the order with all the requirements.

Draining and purging:

On the *heat exchangers* ***PICKER***, draining and purging of the fluids on the shell and on the tubes side are ensured by screwed stoppers in the foundry of the elements and of the lids.

Standard applications:

- **Thermal engine**: power generating unit, marine propulsion, propulsion convey, railway propulsion, pumping, machine of construction …
- **Transmission**: speed-reduction gear, torque converter, gear boxes …
- **Hydraulics**: hydro-electric power station, winch …
- **Test benches**: thermal engine, compressing, pumping, transmission, hydraulic equipment, car industry, aircraft industry …
- **Greasing**: centralized greasing …
- **Machine**: hydraulic press, rolling mill, extrusion machine, crusher, machine tool, special machine, moulding plastics …
- **Energy saving**: heat recovery, hot water production, industrial pool …
- **Others**: compressor, fire protection, cutting fluid, transmitter, station of purification, fluid of hardening, oil industry, transformer unit …

REFERENCE SYSTEM

The references of the *heat exchangers* ***PICKER*** are codified further alphanumeric series made up of 10 types forming 8 groups.

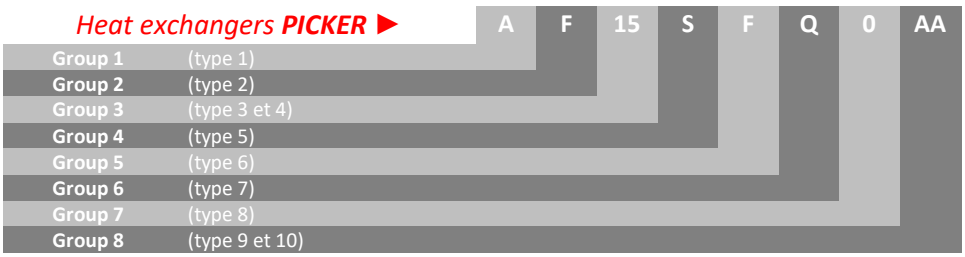

Meaning of each group:

Group 1 (type 1)

It describes the main parts and materials of the shell. Associated with group 2, it also informs about the form and the maximum diameter of connections of the fluid about the shell:

A	Welded shell in aluminium
C	Welded/brazed shell in copper and bronze

Group 2 (type 2)

Essential part of the reference, around which all the codified types in the other groups are developed. It codifies the number of bundle tubes (for the diameter external given of the tubes):

T	92 tubes Ø 6 x 0,5 mm.
U	82 tubes Ø 6 x 0,5 mm.
A	199 tubes Ø 6 x 0,5 mm.
B	184 tubes Ø 6 x 0,5 mm.
L	160 tubes Ø 6 x 0,5 mm.
V	268 tubes Ø 6 x 0,5 mm.
W	250 tubes Ø 6 x 0,5 mm.
X	232 tubes Ø 6 x 0,5 mm.
K	290 tubes Ø 8 x 0,5 mm.
Y	295 tubes Ø 8 x 0,5 mm.
M	353 tubes Ø 8 x 0,5 mm.
Q	361 tubes Ø 8 x 0,5 mm.
R	488 tubes Ø 8 x 0,5 mm.
O	499 tubes Ø 8 x 0,5 mm.

Group 3 (types 3 and 4)

It codifies the length of the tubes of the bundle and, associated with group 2, it also informs about the heat-transferring surface using a matrix equivalence (numbers: **00**, **01**, **02**, **...**, **99**).

Group 4 (type 5)

It codifies the step, the opening and possibly the reinforcement (thickness of baffles doubled or tripled) of the baffles of tube bundle corresponding to the family of heat exchangers given by type 2. Groups 2, 3 and 4 codify the number of baffles of the tube bundle.

Baffles with thickness	Baffles with step		
	«narrow »	« medium »	« large »
Simple (standard)	**S**	**M**	**L**
Doubled (standard)	**G**	**F**	**E**
Tripled (standard)	**R**	**Q**	**P**

Group 5 (type 6)

It codifies materials of the covers:

B	Bronze covers
F	Iron cast covers

Group 6 (type 7)
It codifies the number of fluid passages on tubes side. It also informs about the form and the maximum diameter of connections of the fluid about the covers:

D	Double passage on tubes side
Q	Quadruple passage on tubes side
S	Simple passage on tubes side

Group 7 (type 8)
It codifies the material of the bundle tubes:

0	Bundle tubes in copper
2	Bundle tubes in copper nickel 90/10

Group 8 (types 9 and 10)
It describes all the construction characteristics not having been codified with the 7 groups previously presented. When the heat exchanger is in full conformity with the original drawing (so without any particularity), group 8 is **"AA"**. The most current particularities are:

AA	Nitrile O rings (extreme continuous temperatures: -20 to +100 °C).
AC	« VITON » O rings (extreme continuous temperatures: -20 to +150 °C).
AD	With zinc anodes in covers
AF	Ethylene-propylene O rings (extreme continuous temperatures: -20 to +150 °C).

All the possibilities are available from **"AA"** till **"ZZ"**.

Examples of references:

Heat exchangers ***PICKER*** ►	A	F	07	S	F	Q	0	AA
Welded aluminium shell with counter-flanges for nominal Ø 1"1/2 (DN 40)								
92 tubes Ø 8 x 0,5 mm								
Exchange surface of 0,57 m²								
"Narrow" baffles spacing								
Iron cast covers								
Covers with quadruple passage of fluid on tubes side with connections taped nominal Ø ¾ » (DN 20)								
Bundle tubes in copper								
Heat exchanger equipped with nitrile O rings								

Heat exchangers ***PICKER*** ►	C	K	16	L	B	S	2	AD
Welded/brazed copper and bronze shell with counter-flanges for nominal Ø 2"1/2 (DN 65)								
290 tubes Ø 8 x 0,5 mm								
Exchange surface of 10,02 m²								
"Large" baffles spacing								
Bronze covers								
Covers with simple passage of fluid on tubes side with connections taped nominal Ø 2"1/2 (DN 65)								
Bundle tubes in copper nickel 90/10								
Heat exchanger equipped with nitrile O rings and zinc anodes								

Heat exchangers ***PICKER*** ►

A	M	18	M	F	D	0	AC

- Welded aluminium shell with counter-flanges for nominal Ø 2"1/2 (DN 65)
- 354 tubes Ø 8 x 0,5 mm
- Exchange surface of 17,65 m²
- "Medium" baffles spacing
- Iron cast covers
- Covers with double passage of fluid on tubes side with connections taped nominal Ø 2"1/2 (DN 65)
- Bundle tubes in copper
- Heat exchanger equipped with "Viton" O rings

Heat exchangers ***PICKER*** ►

C	A	10	L	F	S	0	AF

- Welded/brazed copper and bronze shell with counter-flanges for nominal Ø 1"1/2 (DN40)
- 199 tubes Ø 6 x 0,5 mm
- Exchange surface of 1.66 m2
- "Large" baffles spacing
- Iron cast covers
- Covers with simple passage of fluid on tubes side with connections taped nominal Ø 2" (DN 50)
- Bundle tubes in copper nickel 90/10
- Heat exchanger equipped with "EP" O rings

DIMENSIONING OF HEAT EXCHANGERS

Remind on function of a heat exchanger:

A heat exchanger is an intermediate element between two incompatible fluids between them. Its function is to transmit heat of a fluid to another, in a controlled way. For example, by limiting the level of temperature of the fluid to be cooled. A heat exchanger does not intervene in heat production.

Choice elements and precautions to be taken:

In general, it is advisable to make circulate the liquid the most viscous (oil for example) on heat exchanger shell side, so in a way that it follows the baffled course and thus increases its circulation speed.

Preferably, make circulate the hottest fluid on shell side of the heat exchanger and the coldest on tubes side, in order to reduce the differential expansion tubes/shell, especially when the difference of the average temperatures of the respective fluid is important. In any case, this difference does not be superior to 100° C.

For a hydraulic system, it is recommended to supply the heat exchanger by an additional oil circuit, independent of the back piping in order not to make it undergo the possible “pressure shocks”. If this assembly turns out impossible, protect the heat exchanger by providing for an assembly in by-passes with an overpressure valve.

Protect the heat exchanger against the excess pressure due to a viscous fluid (lubrification oil for example), because of cold star, by providing for an assembly in by-passes with an overpressure valve pre-heating system.

If there is a fouling fluid, make it circulate in tubes side in order to make possible to clean the tube bundle easier.

Expression of the thermal power to exchange:

The fluids temperatures circulating in the heat exchanger vary between inlet and outlet. In order to make heat transfer, It is necessary that in every respect of the heat exchanger, the hot fluid temperature must be higher than the cold fluid temperature. The temperature differential between the two fluid is not constant all along the heat exchanger. That is why we introduce the notion of logarithmic average data of the temperatures, named **EML**, which depends only on the inlet/outlet temperatures of the fluids. This value allows to characterize the thermal power to be exchanged or evacuated, representing the quantity of heat to be transferred during the process from the hot fluid to the cold fluid.

This thermal power also depends:

- On the total exchange coefficient, representing the « exchange quality » between the two fluids which varies also all along the heat exchanger.
- On the exchange surface of the separating well between the two fluids.

We note in observing this relation, that the minimum exchange surface to be installed for a thermal power to exchange known (to be evaluated according to the type of installation which generates it), will be obtained when the factor **EML × K** will be maximum. We will have to influence these both factors.

Determination of logarithmic average data of the temperatures:

The heat exchangers with simple passage on tubes side have preferably to be supplied counter current of the fluids in order to obtain the highest **EML** possible all along the entire length of the tube bundle.

The supply with co-current of the fluids can be exceptionally be applied when for example, there are some piping instructions.

In heat exchanger with double or quadruple passage on tubes side, the fluid circulation starts and ends in the same cover with no piping for the other cover. The direction of the first passage on tubes side is indifferent.

Using heat exchanger with simple passage on shell side and multi passage on tubes side has the effect of a diminution of the EML relative to its value with full counter current simple passage on tubes side and with equal flow. Indeed, further the number of passages on tubes side, at least, one of these passages is in co-current way. But, this decreased value of **EML** is often clearly offset by the increase of the coefficient of total exchange thanks to the increase of fluid velocity in tubes side.

The comparison of **EML × K** results for simple passage and multi passage on tubes side will help for the choice for the alimentation way and will confirm the lowest exchange surface.

If we don’t care about the external thermal drops, the power exchange will be equal to the power loss by the hot fluid and to the power recovered by the cold fluid.

We note by observing theses relations that a heat exchanger is not responsible for the temperature variations between the start and the end of each fluid crossing it.

For the heat exchangers with double or quadruple passage on tubes side, the **EML** is calculated by the product of the **EML** for counter current fluids by **α** correction factor indicating the heat exchanger effectiveness compare to full counter current:

We will avoid using heat exchanger with several passages on tubes side when the cold fluid outlet temperature is **ts** higher than the hot fluid outlet temperature. What is obtained when the correction factor **α** has is lower than 0,8. In this case, we have to us heat exchanger with full counter current.

Determination of total exchange coefficient:

The total thermal resistance is opposed to the heat passage of a fluid to another separated by a wall. This is the total of:

- The total thermal resistance of convection between the hot fluid and the wall
- The total thermal resistance of fouling hot fluid side
- The total thermal resistance of conduction of the wall
- The total thermal resistance of fouling cold fluid side
- The total thermal resistance convection between the cold fluid and the wall

We note in observing this relation that it is the higher local thermal resistance (or the lowest local exchange coefficient) which limits the global exchange. So, this is a priority to improve this value.

We can also not that the local thermal resistance of wall conduction **e / l** is negligible face to the four others because the using bundle tubes have a low thickness and are usually in copper alloys which consequently good heat conductors.

Determination of local exchange coefficients:

The two local thermal coefficients are mainly dependent on the nature and the flow of the fluids, and particularly the circulation velocities. However, more velocities increase, more the pressure drops increase, but with high mechanical powers for the pumping of the fluids Further the case to solve, we have to find an economic compromise between coefficient of global exchange and pressure drops.

Contrary to the temperatures **EML** calculations, one of the local exchange coefficients has to be integrated in the heat exchangers geometry.

Classical connection plan of fluids:

The holt fluid circulates on SHELL side and the cold fluid on TUBES side. It is always the situation for oil/water applications and usually for water/water applications.

Opposite connection plan of fluids:

The cold fluid circulates on SHELL side and the hot fluid on SHELL side. This case has to be used ONLY for water/water applications when the lowest pressure drop on hot fluid side is required. Indeed, with equal flow rates, the pressure drops on TUBES side of multitube heat exchangers are regularly very inferior than the pressure drops on SHELL side.

The connection plan is forbidden for a fluid with high. It is used only for one passage on TUBES side.

Determination of deposit coefficients:

After some worked time, a heat exchanger is fouling which induces a loss of heat transfer. That's why at surface exchange calculating, we take account additional thermal resistances which state the fouling margin of the heat exchanger relative to its cleaned state.

The deposit coefficients values depend on especially the nature of the using fluids, on their temperatures and circulation velocities.

We noted that these values can be introduced in the global exchange coefficient calculation **K**, but in order to simplify, it is easier to consider a fouling margin quantified in percentage of the exchange surface calculated at cleaned state.

This results in the choice of the heat exchanger length at least one more superior than the length calculated initially.

General method of heat exchanger selection:

- Collect all the problem data
- Choose the heat exchanger family with which we start the calculation, further the flow rates to be used in the heat exchanger (cf. Table range).

Note :

- This family has to be always selected with taking account the bypass diameter of fluids passage according with enough circulation velocities.
- The circulation velocity on TUBES side does not exceed a certain value further bundle tubes material (limit integrated in table range)
- In any case, the lowest circulation velocities are not recommended, particularly with sea water on tubes side where some deposits can create quickly corrosion issue.
- A scale of circulation velocities on tubes side helps for the local exchange coefficient on tube side.

- Calculate **EML**
- Calculate **K**.
- Calculate **S** useful.
- Check that calculated useful **S** is really available inside the heat exchangers family chosen (cf. table range) and retain **S** installed immediately superior than useful calculated **S** (or the next model if a fouling margin is necessary).
- Determine the pressure drops generated by the heat exchanger selected with the specific curves.
- Pressure drop = function [type heat exchanger, fluid nature, flow rate].
- If the pressure drops found are acceptable, check only if the dimensions of the heat exchanger selected are also acceptable.
- Each time that one of the conditions is not acceptable, (pressure drops, dimensions…), it is necessary to reconsider all the initial calculations after having modify one or several data or changing the heat exchangers family.

Conclusion:

This simplified method of calculation should resolve most of problems relative to the *heat exchangers* ***PICKER*** for oil/water applications or water/water applications:

- Selection of type of heat exchanger further operating data (cf. examples of method applications).
- Calculation of exchange power with type of heat exchanger and the others operating data.
- Calculation of hot fluid flow rate with type of heat exchanger and the others operating data.

But with all the different thermal cases, our Technical department is at your own disposal for advising.

Connection plans

Fig. 1 **SIMPLE PASSAGE TUBES side** **Counter current fluids**	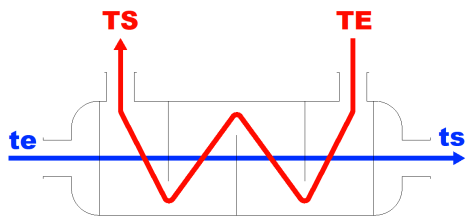
Fig. 2 **SIMPLE PASSAGE TUBES side** **Co-current fluids**	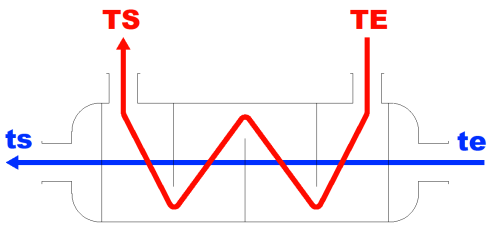
Fig. 3 **DOUBLE PASSAGE TUBES side** **Indifferent way of circulation**	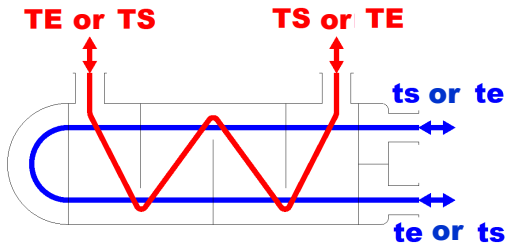
Fig. 4 **QUADRUPLE PASSAGE TUBES side** **Indifferent way of circulation**	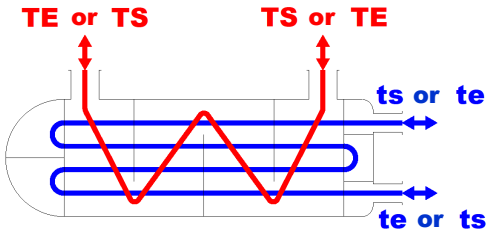

Table range

This table indicates, further the *heat exchangers families*, the maximum acceptable flow rates in the coolers (subject the acceptable pressure drops), further the baffles space on SHELL side, further the number of passages on TUBES side and the bundle tubes material. We can find also the surface exchange.

HEAT EXCHANGERS RANGE											
Exchanger families	Shell material	Maxi acceptable flow rate SHELL side(l/mn)			Maxi acceptable flow rate TUBES side(l/mn)						Exchange surface (m²)
					Number of passages						
		Baffling			Simple		Double		Quadruple		
		S	M	L	Cu	CuNi	Cu	CuNi	Cu	CuNi	
U05 to 14	Alu - Cu	110		210				100			0.26 to 1.46
T05 to 14		90		190		380					0.29 to 1.64
A07 to 17		160	250	360		590					0.92 to 6.17
B07 to 17		180	270	380				250			0.85 to 5.70
L07 to 17		200	310	380						100	0.74 to 4.96
V08 to 18		280	420	540		1000					1.55 to 10.02
W08 to 18		300	450	590				380			1.45 to 9.35
X08 to 18		310	460	590						150	1.34 to 8.68
K09 to 19		480	710	1000	740	1000	370	590			2.73 to 17.39
Y09 to Y19		500	700	1000	750	1000					2.77 to 17.69
M11 to 20		670	990	1000	900	1910	450	1000			4.82 to 25.48
Q11 to Q20		650	970	1000	920	1910					4.92 to 25.98
R11 to 21		1140	1730	1910	1240	1910	620	1000			6.60 to 42.14
O11 to O21		1070	1680	1910	1270	1910					6.75 to 43.09

GENERAL SALES TERMS

Contract conclusion: the sale is definitive after sending order confirmation ***PICKER S.A.*** Except particular agreement from our qualified departments, the orders cannot be cancelled and/or modified. Our conditions cancel any clauses and any different conditions printed on the correspondences or orders of buyers.

Price: Unless otherwise indicated, prices are quoted ex-works with non-returnable packing to add. The price in the invoice is the same than the price on our order confirmation which is systematically sent after order receipt.

Delivery terms: The goods are shipped at the risk and peril of the buyer. Except in specific cases, goods are shipped by our own conveyor.

Delivery time: For our standard heat exchangers, the contractual delivery time is **2 months**, out of our annual closing period, at receipt order. This delivery time is from factory (Ex-works). No penalties or compensations can be claimed if this delivery time is respected. Further buyer requirements and our possibilities, this delivery time can be shorter.

Warranty: ***PICKER S.A.*** guarantees their products for a period of **2 years** from shipment Ex-works only. This warranty covers any manufacturing defect, subject to a normal use. This warranty is limited to the fixing or replacement of all or part of equipment (if manufacturing defect is clearly identified by us); This warranty is out of all other damages or manufacture costs which could result to.
In case if, when the heat exchanger incriminated is back to our factory, ***PICKER S.A.*** is not responsible for any manufacturing defect, the costs arising from this return have to be paid by the sender or the declarant of the warranty call. The warranty does not cover the defects caused by any corrosion, by any manutention defaults or by any installation defaults which force the heat exchangers to work in others conditions than conditions preconized by ***PICKER S.A***.
PICKER S.A. declines its responsibility et cancels all warranty for any changing on heat exchangers (reparation or modification) which have been executed without our official authorization from ***PICKER S.A***. This warranty is also cancelled for any heat exchangers whom the firm plate has been removed.
PICKER S.A., which applies continually a policy of range amelioration, reserves the right to make any changing of their products in order to bring more performance without being in the obligation to make the latter on heat exchangers manufactured before.

Payment terms: All our products have to be paid at our head office. The shipment date or availability is the starting point of the payment deadline. Payment has to be received by ***PICKER S.A*** before 60 days nets invoice date., except in special situations authorized by our qualified departments only and as it is clearly noted in our order confirmation. In case of unpaid invoices at deadline, the amounts will carry interest by rights and without formal demand, at the rates of the Bank of France, increased by two points, without this clause damages the payability of the debt. Furthermore, any delay in the payment by rights, chargeable to the buyer, a fixed compensation, as penalty clause, in 15 % of the amount of the unpaid invoice. The nonpayment by the buyer of an invoice in its term returns the immediately due payment of the other invoices even if they gave rise to already put into service already issued drafts. ***PICKER S.A.*** shall have besides, in this case, the faculty to require the cash, clear payment without discount, pre-shipment of any new supply whatever are the conditions before agreed. Any change in the situation of the buyer entails the application of the same measures as those aimed in case of nonpayment of invoices.

In case of contesting, the French law is only applicable and the Commercial court of Versailles, only competent, in case of call-in guarantee or plurality of Defenders.